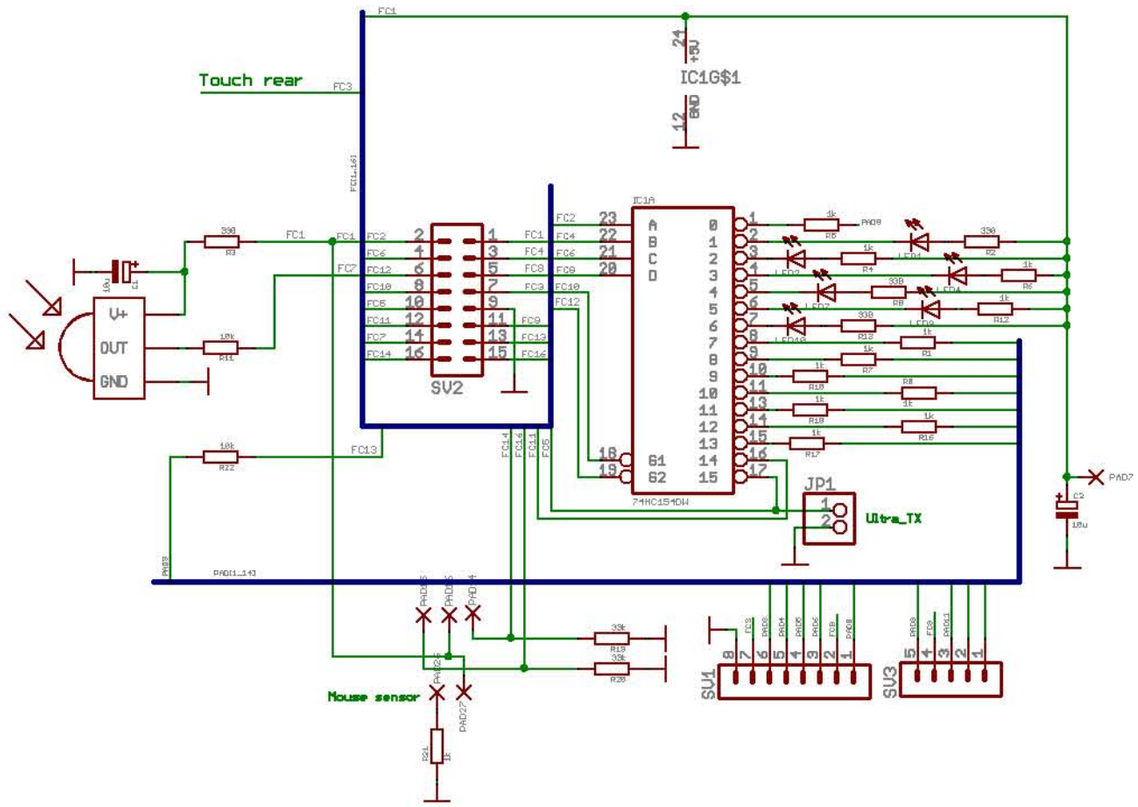

TITLE: front_V5_05	
Document Number:	REV:
Date: 15-03-2006 00:23:43	Sheet: 1/1